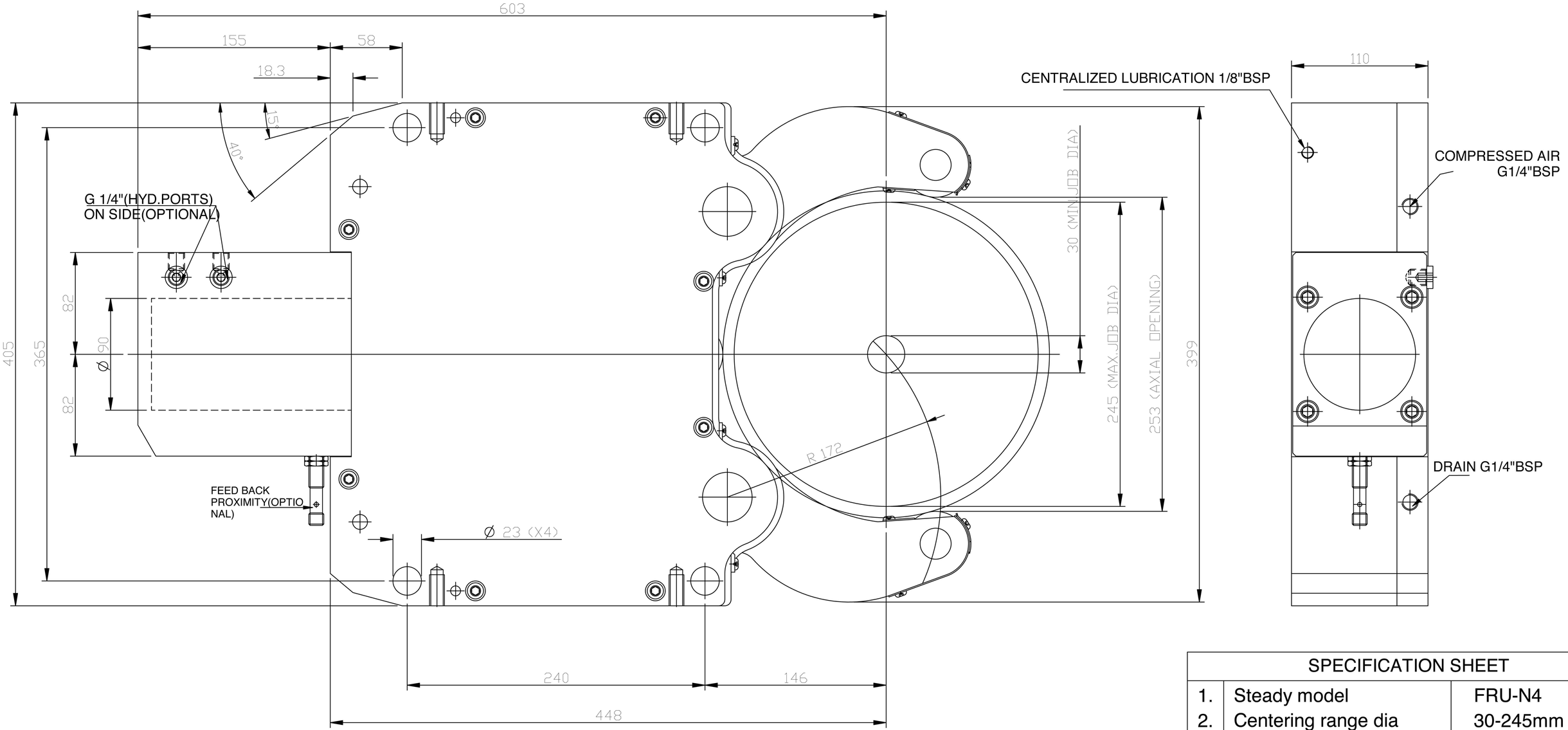

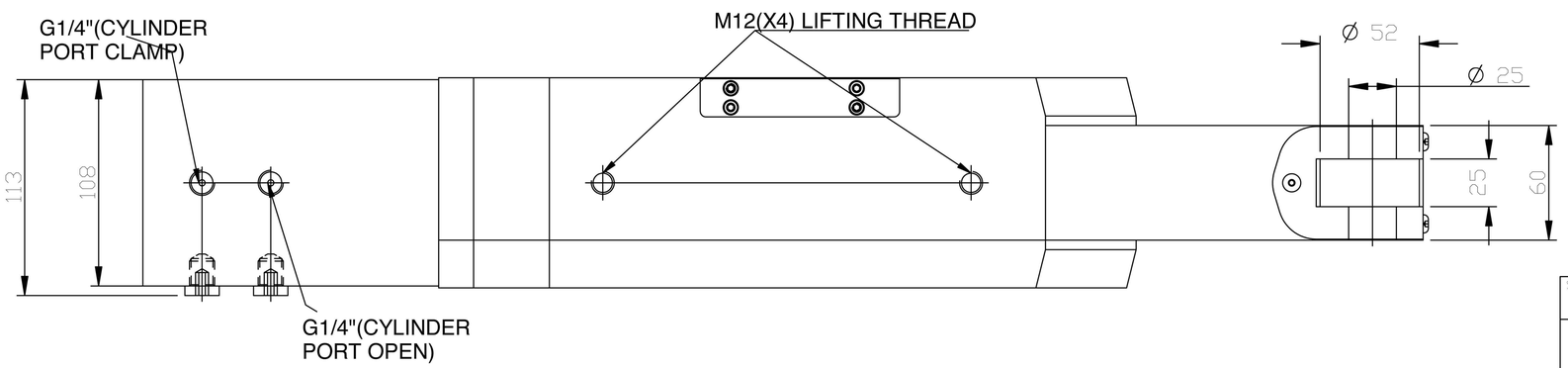

SPECIFICATION SHEET

1.	Steady model	FRU-N4
2.	Centering range dia	30-245mm
3.	Piston dia	90 mm
4.	Operating pressure	8-80 bar
5.	Max clamping force/ roller	1700 dan
6.	Centering accuracy	0.04 mm
7.	Repetability	0.007 mm
8.	Max roller surface speed	725 m/ min
9.	Weight(approx)	104 Kg

IF IN DOUBT ASK.
DO NOT MEASURE DRAWING

Surface finish
Ra value - µm
Roughness No.

0.025	0.05	0.1	0.2	0.4	0.8	1.6	3.2	6.3	12.5	25	50	100	200	400	800	1600	3200
N1	N2	N3	N4	N5	N6	N7	N8	N9	N10	N11	N12						

Semi product:

Final size:

Material:

Qty:

Weight:

Scale:

IS 2102-1969
General tolerances
where not specified

Linear Dimension

Over	Upto	Tol.
0.5	6	±0.1
6	30	±0.2
30	120	±0.3
120	315	±0.5
315	1000	±0.8
1000	2000	±1.2

Angular Dimension

Over	Upto	Tol.
0	10	±1°
10	50	±30'
50	120	±20'
120	400	±10'

Alterations

Advice No	Description	No.of Places	Old No.	Name	Date

Designation:
OVERALL LAYOUT

Drawn		19-04-2013
Checked		19-04-2013
Approved		

Kitagawa EUROPE

Drawing No.
FRUN4-05-001-3

No. of Sheets:

Sheet No.

Heat treatment	Hardness	Case depth